BLAND COUNTY BOARD OF SUPERVISORS

COMMUNITY OF ROCKY GAP

SAFE ROUTES TO SCHOOL SIDEWALK PROJECT

Project # EN14-010-789,P101,C501 UPC No. 106071

ISSUED FOR BIDS

OWNER:

COUNTY OF BLAND, VIRGINIA
P.O. BOX 510
612 MAIN ST.
BLAND, VA 24315

BLAND COUNTY BOARD OF SUPERVISOR'S
ATTN: ERIC WORKMAN, COUNTY ADMINISTRATOR
PHONE: (276) 688-4622
EMAIL: eworkman@bland.org

ENGINEER:

CHA, INC.
1901 INNOVATION DRIVE, SUITE 2100
BLACKSBURG, VA 24060
ATTN: STEPHEN M. STEELE, P.E.
PHONE: (540) 552-5548
EMAIL: ssteele@chacompanies.com

LOCATION MAP SCALE: 1"=400'

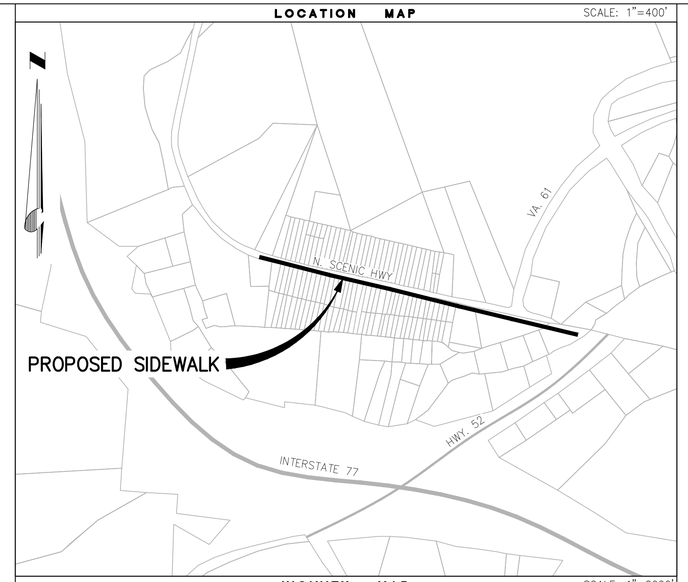

VICINITY MAP SCALE: 1"=2000'

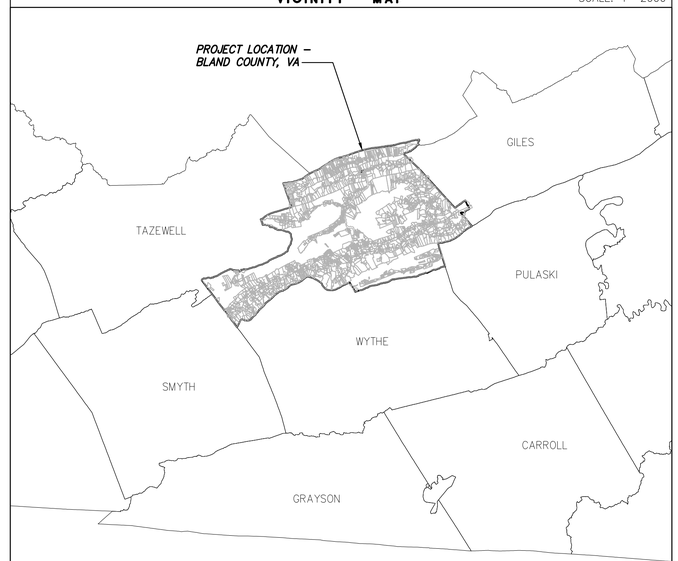

LIST OF DRAWINGS	
Sheet Number	Sheet Title
G-001	COVER SHEET
C-001	CONSTRUCTION DETAILS I
C-002	EROSION & SEDIMENT CONTROL NARRATIVE, NOTES & DETAILS
C-101	OVERALL LAYOUT SHEET
C-102	LAYOUT PLANS A & B
C-103	LAYOUT PLAN C
E-600	ELECTRICAL DETAILS

Drawing Copyright © 2015

CHA
1901 Innovation Drive, Suite 2100
Blacksburg, VA 24060
540.552.5548 • www.chacompanies.com

BLAND COUNTY BOARD OF SUPERVISORS
BLAND COUNTY, VIRGINIA

COMMONWEALTH OF VIRGINIA
STEPHEN M. STEELE
Lic. No. 41449
07/26/16
PROFESSIONAL ENGINEER

IT IS A VIOLATION OF LAW FOR ANY PERSON, UNLESS THEY ARE ACTING UNDER THE DIRECTION OF A LICENSED PROFESSIONAL ENGINEER, ARCHITECT, LANDSCAPE ARCHITECT OR LAND SURVEYOR TO ALTER AN ITEM IN ANY WAY. IF AN ITEM BEARING THE STAMP OF A LICENSED PROFESSIONAL IS ALTERED, THE ALTERING ENGINEER, ARCHITECT, LANDSCAPE ARCHITECT OR LAND SURVEYOR SHALL STAMP THE DOCUMENT AND INCLUDE THE NOTATION "ALTERED BY" FOLLOWED BY THEIR SIGNATURE, THE DATE OF SUCH ALTERATION, AND A SPECIFIC DESCRIPTION OF THE ALTERATION.

COMMUNITY OF ROCKY GAP
SAFE ROUTES TO SCHOOL
SIDEWALK PROJECT

No.	Submittal / Revision	App'd.	By	Date
4	ISSUED FOR BIDS	SMS	BSR	07/26/16
3	VDOT RESUBMITTAL	SMS	BSR	07/14/16
2	VDOT 90% SUBMITTAL	SMS	BSR	03/04/16
1	ISSUED FOR PERMITS	SMS	BSR	01/31/16
0	60% DESIGN REVIEW	SMS	BSR	11/30/15

COVER SHEET

Designed By:	Drawn By:	Checked By:
BSR	CTB	SMS
Issue Date: 07/2016	Project No: 30270	Scale: AS SHOWN

Drawing No.:
G-001

File: V:\PROJECTS\BVA\30270\CADD_ACAD\G-001_30270.DWG
Saved: 8/3/2016 10:01:45 AM Plotted: 8/3/2016 10:06:39 AM Current User: Rowe, Brad LastSavedBy: 4148

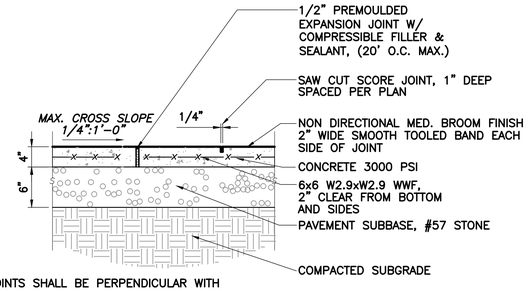

NOTE:
ALL JOINTS SHALL BE PERPENDICULAR WITH EDGES OF WALK. IF WALK IS CURVED, JOINTS TO RADIATE FROM THE RADIUS POINT.

1 CONCRETE SIDEWALK
SECTION SCALE: N.T.S.

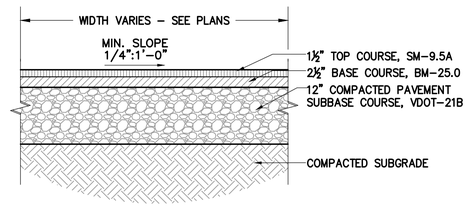

2 ASPHALT ROADWAY
SECTION SCALE: N.T.S.

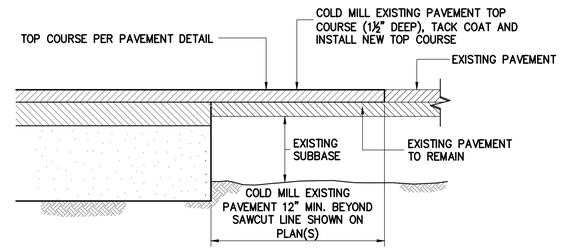

3 TRANSITION TO EXISTING ASPHALT
SECTION SCALE: N.T.S.

4 NOT USED

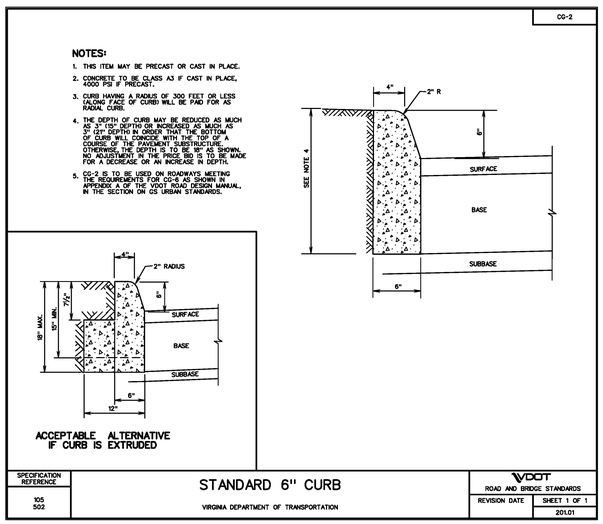

5 VDOT CG-2 INDEPENDENT CURB
SCALE: N.T.S.

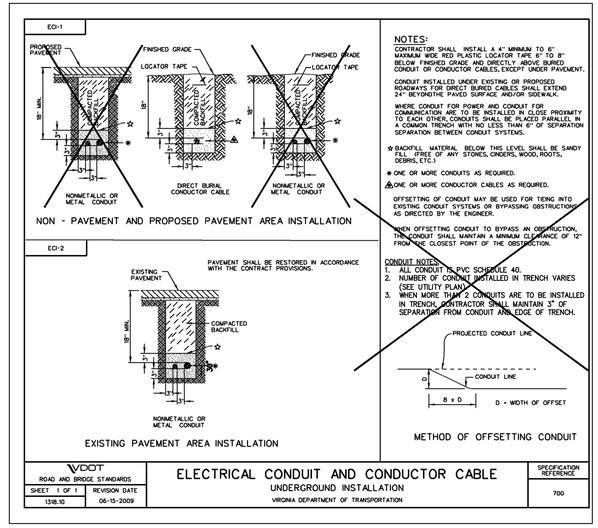

6 ELECTRICAL CONDUIT UNDERGROUND INSTALLATION

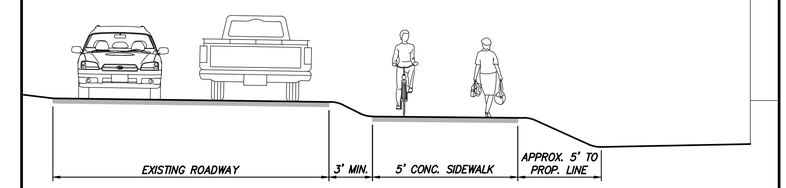

7 TYPICAL SIDEWALK SECTION

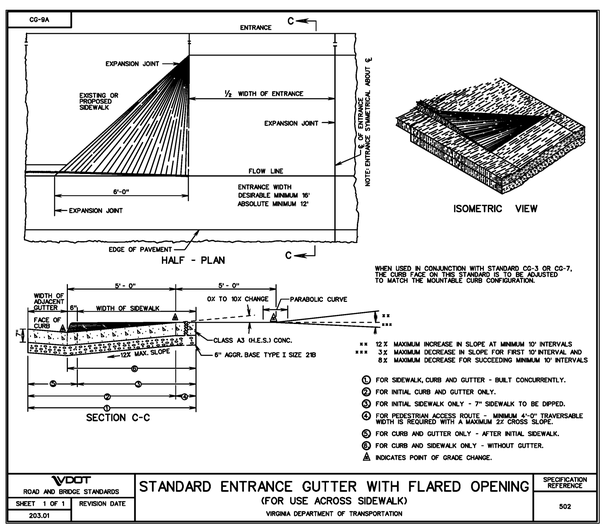

8 VDOT CG-9A DRIVEWAY ENTRANCE
SCALE: N.T.S.

9 NOT USED

10 NOT USED

Drawing Copyright © 2015

CHA
1901 Innovation Drive, Suite 2100
Blacksburg, VA 24060
540.552.5548 • www.chacompanies.com

BLAND COUNTY BOARD OF SUPERVISORS
BLAND COUNTY, VIRGINIA

COMMUNITY OF ROCKY GAP SAFE ROUTES TO SCHOOL SIDEWALK PROJECT

IT IS A VIOLATION OF LAW FOR ANY PERSON, UNLESS THEY ARE ACTING UNDER THE DIRECTION OF A LICENSED PROFESSIONAL ENGINEER, ARCHITECT, LANDSCAPE ARCHITECT OR LAND SURVEYOR TO ALTER AN ITEM IN ANY WAY. IF AN ITEM BEARING THE STAMP OF A LICENSED PROFESSIONAL IS ALTERED, THE ALTERING ENGINEER, ARCHITECT, LANDSCAPE ARCHITECT OR LAND SURVEYOR SHALL STAMP THE DOCUMENT AND INCLUDE THE NOTATION "ALTERED BY" FOLLOWED BY THEIR SIGNATURE, THE DATE OF SUCH ALTERATION, AND A SPECIFIC DESCRIPTION OF THE ALTERATION.

No.	Submittal / Revision	App'd.	By	Date
5	ISSUED FOR BIDS	SMS	BSR	07/26/16
4	VDOT RESUBMITTAL	SMS	BSR	07/14/16
3	VDOT 90% SUBMITTAL	SMS	BSR	03/04/16
2	ISSUED FOR PERMITS	SMS	BSR	01/31/16
1	60% DESIGN REVIEW	SMS	BSR	11/30/15

CONSTRUCTION DETAILS I

Designed By:	Drawn By:	Checked By:
BSR	CTB	SMS
Issue Date: 07/2016	Project No: 30270	Scale: AS SHOWN

Drawing No.:
C-001

File: V:\PROJECTS\BVA\30270\CADD_ACAD\C-001_30270.DWG
Saved: 7/14/2016 2:20:08 PM Plotted: 8/3/2016 10:07:18 AM Current User: Rowe, Brad LastSavedBy: 4148

EROSION AND SEDIMENT CONTROL NARRATIVE:

PROJECT DESCRIPTION

PROJECT CONSISTS OF CONSTRUCTION AND INSTALLATION OF APPROXIMATELY _____ LF OF CONC. SIDEWALK. SIDEWALK WILL BE INSTALLED AT EXISTING GRADE ELEVATIONS AND MINIMAL GRADING WILL BE REQUIRED DURING CONSTRUCTION. THE TOTAL AREA DISTURBED WILL BE APPROXIMATELY _____ ACRE.

EXISTING SITE CONDITIONS:

THE PROPOSED SIDEWALK WILL GENERALLY BE LOCATED IN AND ADJACENT TO EXISTING VDOT RIGHTS OF WAY. AREAS WILL CONSIST OF GRASS, GRAVELED ROAD, ASPHALT ROAD. TERRAIN IS A COMBINATION OF GRASS, PAVEMENT AND GRAVEL.

ADJACENT PROPERTY:

ADJACENT PROPERTIES ARE MOSTLY RESIDENTIAL, LIGHT COMMERCIAL, AND SCHOOL PROPERTY.

OFF-SITE AREAS:

THIS PROJECT WILL RESULT IN A "BALANCED" SITE AND NO EXCESS MATERIAL WILL BE EXPORTED NOR WILL ANY MATERIAL BE IMPORTED FROM OTHER PROPERTIES. IF OFF-SITE AREAS ARE REQUIRED THE LOCATION OF ALL OFF-SITE FILL, BORROW, STOCKPILE, AND/OR STAGING AREAS ASSOCIATED WITH THE CONSTRUCTION OF THIS PROJECT SHALL BE PROVIDED TO THE OWNER/ENGINEER PRIOR TO THE PRE-CONSTRUCTION MEETING. CONTRACTOR WILL BE REQUIRED TO OBTAIN PERMIT(S) FOR ANY OFFSITE AREAS UTILIZED FOR CONSTRUCTION STAGING AND/OR STORAGE.

SOILS:

SEE ATTACHED SOIL REPORT FOR THE PROJECT AREA.

CRITICAL EROSION AREAS:

CRITICAL AREAS INCLUDE CULVERTS AND AREAS DOWNHILL FROM THE PROPOSED DISTURBANCE. THE PROPOSED EROSION AND SEDIMENT CONTROL MEASURES AND STREAM STABILIZATION MEASURES ARE INTENDED TO MINIMIZE ANY POTENTIAL PROBLEMS AND PROMOTE STABILIZATION.

EROSION AND SEDIMENT CONTROL MEASURES – GENERAL: ALL STRUCTURAL AND VEGETATIVE EROSION AND SEDIMENT CONTROL PRACTICES WILL BE CONSTRUCTED AND MAINTAINED IN ACCORDANCE WITH THE MINIMUM STANDARDS AND SPECIFICATIONS OF THE "VIRGINIA EROSION AND SEDIMENT CONTROL HANDBOOK" (VESCH), LATEST EDITION.

MINIMUM STANDARDS: ALL APPLICABLE MINIMUM STANDARDS SHOULD BE ADDRESSED:

1. PERMANENT OR TEMPORARY SOIL STABILIZATION SHALL BE APPLIED TO DENUDE AREAS WITHIN SEVEN (7) DAYS AFTER FINAL GRADE IS REACHED ON ANY PORTION OF THE SITE. TEMPORARY SOIL STABILIZATION SHALL BE APPLIED WITHIN SEVEN (7) DAYS TO DENUDED AREAS THAT MAY NOT BE AT FINAL GRADE BUT WILL REMAIN DORMANT (UNDISTURBED) FOR LONGER THAN FOURTEEN (14) DAYS. PERMANENT STABILIZATION SHALL BE APPLIED TO AREAS THAT ARE TO BE LEFT DORMANT FOR MORE THAN ONE YEAR.
2. PERIMETER DIKES AND DITCHES, SEDIMENT BARRIERS, AND OTHER MEASURES INTENDED TO TRAP SEDIMENT SHALL BE CONSTRUCTED AS A FIRST STEP IN ANY LAND DISTURBING ACTIVITY AND SHALL BE MADE FUNCTIONAL BEFORE LAND DISTURBANCE TAKES PLACE.
3. STABILIZATION MEASURES SHALL BE APPLIED TO EARTHEN STRUCTURES SUCH AS DAMS, DITCHES, AND DIVERSIONS IMMEDIATELY AFTER INSTALLATION.
4. WHERE CONSTRUCTION VEHICLE ACCESS ROUTES INTERSECT PAVED PUBLIC ROADS, PROVISIONS SHALL BE MADE TO MINIMIZE THE TRANSPORT OF SEDIMENT BY (VEHICULAR) TRACKING ONTO THE PAVED SURFACE. WHERE SEDIMENT IS TRANSPORTED ONTO A PUBLIC ROAD SURFACE, THE ROAD SHALL BE CLEANED THOROUGHLY AT THE END OF EACH DAY. SEDIMENT SHALL BE REMOVED FROM THE ROADS BY SHOVELING OR SWEEPING AND TRANSPORTED TO A SEDIMENT CONTROL DISPOSAL AREA. STREET WASHING SHALL BE ALLOWED ONLY AFTER SEDIMENT IS REMOVED IN THIS MANNER.
5. ALL TEMPORARY EROSION AND SEDIMENT CONTROL MEASURES SHALL BE REMOVED WITHIN THIRTY (30) DAYS AFTER FINAL SITE STABILIZATION OR AFTER THE TEMPORARY MEASURES ARE NO LONGER NEEDED, UNLESS OTHERWISE AUTHORIZED BY THE LOCAL PROGRAM ADMINISTRATOR. TRAPPED SEDIMENT AND THE DISTURBED SOIL AREAS RESULTING FROM THE DISPOSITION OF TEMPORARY MEASURES SHALL BE PERMANENTLY STABILIZED TO PREVENT FURTHER EROSION AND SEDIMENTATION.

STRUCTURAL PRACTICES

1. SILT FENCE – STD. & SPEC. 3.05

   Silt fence shall be used to intercept and detain small amounts of sediment from disturbed areas and to decrease the velocity of sheet flows and low-to-moderate level channel flows during construction.

   Sequence of Installation: Prior to any land disturbance
   Maintenance: Refer to Std. & Spec. 3.05
   Removal Event: Following permanent stabilization of all upland areas

2. STORM DRAIN INLET PROTECTION – STD. & SPEC. 3.07

   Storm drain inlet protection shall be placed at existing and proposed grate inlets to prevent sediment from entering the storm piping.

   Sequence of Installation: Existing structures – prior to any land disturbance
   Future structures – immediately following installation
   Maintenance: Refer to Std. & Spec. 3.07
   Removal Event: Following permanent stabilization of all upland areas

3. CULVERT INLET PROTECTION – STD. & SPEC. 3.08

   Culvert inlet protection shall be installed and consist of a sediment filter located at the inlet to storm sewer culverts, which prevents sediment from entering, accumulating in and being transferred by the culvert. It provides erosion control at culverts during the phase of the project where elevations and drainage patterns are changing, causing original control measures to be ineffective.

   Sequence of Installation: Existing structures – prior to any land disturbance
   Future structures – immediately following installation
   Maintenance: Refer to Std. & Spec. 3.08
   Removal Event: Following permanent stabilization of all upland areas

VEGETATIVE PRACTICES

GENERAL: A PERMANENT VEGETATIVE COVER SHALL BE ESTABLISHED ON DENUDED AREAS NOT OTHERWISE PERMANENTLY STABILIZED BY PAVEMENT. PERMANENT VEGETATION SHALL NOT BE CONSIDERED ESTABLISHED UNTIL A GROUND COVER IS ACHIEVED THAT IS UNIFORM AND MATURE ENOUGH TO SURVIVE AND INHIBIT EROSION. NEW VEGETATION SHALL BE MAINTAINED AT A MINIMUM OF ONE FULL YEAR AFTER PLANTING. NEW SEEDING SHALL BE SUPPLIED WITH ADEQUATE MOISTURE, ESPECIALLY LATE IN THE SEASON, AND IN ABNORMALLY HOT OR DRY WEATHER. STABILIZATION PRACTICES SHALL BE ACCOMPLISHED IN ACCORDANCE WITH THE APPROPRIATE VESCH STANDARD AND SPECIFICATION AND THE EROSION AND SEDIMENT CONTROL PLAN.

PERMANENT OR TEMPORARY SOIL STABILIZATION SHALL BE APPLIED TO DENUDED AREAS WITHIN SEVEN (7) DAYS AFTER FINAL GRADE IS REACHED ON ANY PORTION OF THE SITE. TEMPORARY SOIL STABILIZATION SHALL BE APPLIED WITHIN SEVEN (7) DAYS TO DENUDED AREAS THAT MAY NOT BE AT FINAL GRADE BUT WILL REMAIN DORMANT (UNDISTURBED) FOR LONGER THAN 14 DAYS. PE14ANENT SEEDING SHALL BE USED ON ALL AREAS THAT ARE NOT AT FINAL GRADE AND THAT WILL BE LEFT DORMANT FOR A PERIOD OF MORE THAN 1 YEAR.

1. TEMPORARY SEEDING – STD. & SPEC. 3.31

   Temporary seeding shall be applied over denuded areas within 7 days for areas that will not be brought to final grade within 30 days. Temporary seeding mixes shall be as described on the detail drawings.

   Sequence of Installation: When cleared areas will not be brought to final grade within 30 days
   Maintenance: Refer to Std. & Spec. 3.31; areas which fail to establish vegetative cover adequate to prevent rill erosion are to be reseeded.
   Removal Event: As needed for final grading.

2. PERMANENT SEEDING – STD. & SPEC. 3.32

   Permanent seeding shall also be used on all areas that are not at final grade and that will be left dormant for a period of more than 1 year. If conflicts exist between the project specifications and the VESCH Std. & Spec. 3.32, the more stringent requirement shall apply. Permanent seeding mixes and rates are found on this sheet.

   Sequence of Installation: Within 7 days of achieving final grade or as noted above
   Soil Testing Requirements: Refer to Std. & Spec. 3.32
   Maintenance: Refer to Std. & Spec. 3.32; areas which fail to establish vegetative cover adequate to prevent rill erosion are to be immediately reseeded, following identification of the cause of poor germination.

PERMANENT STABILIZATION

ALL NON-PAVED AREAS DISTURBED BY CONSTRUCTION SHALL BE STABILIZED WITH PERMANENT SEEDING IMMEDIATELY FOLLOWING FINISH GRADING. SEEDING SHALL BE IN ACCORDANCE WITH STD. & SPEC. 3.32, PERMANENT SEEDING. SEED TYPE SHALL BE AS SPECIFIED FOR "MINIMUM CARE LAWNS" AND "GENERAL SLOPES" IN THE HANDBOOK. MULCH (STRAW OR FIBER) SHALL BE USED ON ALL SEEDED SURFACES. IN ALL SEEDING OPERATIONS SEED, FERTILIZER AND LIME SHALL BE APPLIED PRIOR TO MULCHING.

MANAGEMENT STRATEGIES

1. CONSTRUCTION SHALL BE SEQUENCED SO THAT GRADING OPERATIONS CAN BEGIN AND END AS QUICKLY AS POSSIBLE.
2. ISOLATE TRENCHING FOR UTILITIES AND DRAINAGE FROM DOWNSTREAM CONVEYANCES IN ORDER TO MINIMIZE PERIMETER CONTROLS.
3. ALL CUT AND FILL SLOPES SHALL BE SEEDED WITHIN SEVEN (7) DAYS OF ACHIEVING FINAL GRADE.
4. ALL EROSION AND SEDIMENT CONTROL PRACTICES SHALL BE MAINTAINED UNTIL THEY ARE NO LONGER REQUIRED TO COMPLY WITH THE CONTRACT DOCUMENTS OR STATE LAW. ONLY AFTER INSPECTION AND APPROVAL FROM THE VESCP AUTHORITY MAY ITEMS BE REMOVED FOLLOWING THE STABILIZATION OF CONTRIBUTING AREAS.

INSPECTIONS

THE GENERAL CONTRACTOR SHALL INSPECT DISTURBED AREAS OF THE SITE THAT HAVE NOT BEEN FINALLY STABILIZED, AND AREAS USED FOR STORAGE OF MATERIALS THAT ARE EXPOSED TO PRECIPITATION, STRUCTURAL CONTROL MEASURES, AND THE AREA OF CONSTRUCTION VEHICLE ACCESS AT LEAST EVERY FOURTEEN (14) CALENDAR DAYS, AND WITHIN FORTY-EIGHT (48) HOURS OF THE END OF A STORM EVENT PRODUCING 1/4" OR GREATER OF PRECIPITATION. WHERE AREAS HAVE BEEN FINALLY OR TEMPORARILY STABILIZED OR RUNOFF IS UNLIKELY DUE TO WINTER CONDITIONS (SITE IS COVERED WITH SNOW, ICE, OR FROZEN GROUND EXISTS) SUCH INSPECTIONS SHALL BE CONDUCTED AT LEAST ONCE EVERY MONTH.

INSPECT DISTURBED AREAS AND AREAS OF MATERIALS STORAGE THAT ARE EXPOSED TO PRECIPITATION FOR EVIDENCE OF, OR THE POTENTIAL FOR SEDIMENT ENTERING THE STORM DRAIN SYSTEM. INSPECT E&S CONTROLS IN ACCORDANCE WITH REQUIREMENTS STATED HEREIN, AND INSPECT POINTS OF STORM DRAIN DISCHARGE FOR EXCESSIVE SEDIMENTATION. CORRECT SITE CONTROLS AS REQUIRED TO REDUCE SEDIMENTATION OF STORM DRAINS, CULVERTS, AND RECEIVING CHANNELS.

IF CONTROLS OR SEDIMENT PREVENTION AREAS ARE FOUND TO BE IN NEED OF REPAIR OR MODIFICATION, THE GENERAL CONTRACTOR SHALL PROVIDE ADDITIONAL MEASURES OR MODIFICATIONS TO EXISTING MEASURES AS REQUIRED. ANY ADDITIONAL MEASURES OR MODIFICATIONS TO EXISTING MEASURES SHALL BE RECORDED AS FIELD REVISIONS TO THESE PLANS. IN THE EVENT THAT ADDITIONAL CONTROLS ARE FOUND TO BE REQUIRED, THE GENERAL CONTRACTOR SHALL BE RESPONSIBLE FOR IMPLEMENTING THESE CONTROLS BEFORE THE NEXT ANTICIPATED STORM EVENT. IF IMPLEMENTATION BEFORE THE NEXT STORM EVENT IS IMPRACTICAL, THEY SHALL BE IMPLEMENTED AS SOON AS PRACTICAL.

EROSION AND SEDIMENT CONTROL NARRATIVE (CONT'D):

INSPECTIONS (CONT'D)

A REPORT SUMMARIZING THE SCOPE OF INSPECTIONS, NAME OF INSPECTOR, INSPECTOR'S QUALIFICATIONS, DATES OF INSPECTIONS, MAJOR OBSERVATIONS PERTAINING TO THE IMPLEMENTATION OF THESE EROSION CONTROL PLANS, AND ACTIONS TAKEN SHALL BE MADE AND RETAINED AS A PART OF THESE PLANS. MAJOR OBSERVATIONS OF THESE REPORTS SHALL INCLUDE: THE LOCATIONS OF EXCESSIVE SEDIMENTATION FROM THE SITE; LOCATIONS OF CONTROLS IN NEED OF REPAIR; LOCATIONS OF FAILED OR INADEQUATE CONTROLS; AND LOCATIONS WHERE ADDITIONAL CONTROLS ARE NEEDED.

STORMWATER MANAGEMENT

THIS PROJECT IS LINEAR IN NATURE AND ALL DISTURBED AREAS WILL BE RETURNED TO ORIGINAL CONDITION UPON COMPLETION OF CONSTRUCTION. EXISTING DRAINAGE PATTERNS WILL BE MAINTAINED DURING AND AFTER CONSTRUCTION AND THE PROJECT WILL RESULT IN MINIMALLY INCREASED STORMWATER RUNOFF.

ENVIRONMENTAL INVENTORY

THERE ARE NOT TIDAL SHORES, WETLANDS, NON-TIDAL WETLANDS, RESOURCE PROTECTION AREAS OR HYDRIC SOILS ASSOCIATED WITH THIS PROJECT SITE. SLOPES IN EXCESS OF 25% DO EXIST ON-SITE BUT NOT IN AREAS WHERE CONSTRUCTION ACTIVITIES ARE ANTICIPATED.

GENERAL EROSION AND SEDIMENT CONTROL NOTES:

ES-1: UNLESS OTHERWISE INDICATED, CONSTRUCT AND MAINTAIN ALL VEGETATIVE AND STRUCTURAL EROSION AND SEDIMENT CONTROL PRACTICES ACCORDING TO MINIMUM STANDARDS AND SPECIFICATIONS OF THE VIRGINIA EROSION AND SEDIMENT CONTROL HANDBOOK, AND VIRGINIA REGULATIONS VR 625-02-00 EROSION AND SEDIMENT CONTROL REGULATIONS.

ES-2: VESCP AUTHORITY INSPECTORS WILL MAKE A CONTINUING REVIEW AND EVALUATION OF THE METHODS AND EFFECTIVENESS OF THE E.S.C. PLAN.

ES-3: PLACE ALL EROSION AND SEDIMENT CONTROL MEASURES PRIOR TO OR AS THE FIRST STEP IN CLEARING, GRADING, OR LAND DISTURBANCE.

ES-4: MAINTAIN A COPY OF THE APPROVED EROSION AND SEDIMENT CONTROL PLAN ON THE SITE AT ALL TIMES.

ES-5: PRIOR TO COMMENCING LAND-DISTURBING ACTIVITIES IN AREAS OTHER THAN INDICATED ON THESE PLANS (INCLUDING, BUT NOT LIMITED TO, OFFSITE BORROW OR WASTE AREA), SUBMIT A SUPPLEMENTARY EROSION CONTROL PLAN TO THE ARCHITECT/ENGINEER FOR REVIEW AND ACCEPTANCE.

ES-6: PROVIDE ADDITIONAL EROSION CONTROL MEASURES NECESSARY TO PREVENT EROSION AND SEDIMENTATION AS DETERMINED BY THE LOCAL AUTHORITY HAVING JURISDICTION.

ES-7: ALL DISTURBED AREAS SHALL DRAIN TO APPROVED SEDIMENT CONTROL MEASURES AT ALL TIMES DURING LAND-DISTURBING ACTIVITIES AND DURING SITE DEVELOPMENT.

ES-8: DURING DEWATERING OPERATIONS, PUMP WATER INTO AN APPROVED FILTERING DEVICE.

ES-9: INSPECT ALL EROSION CONTROL MEASURES DAILY AND AFTER EACH RUNOFF-PRODUCING RAINFALL EVENT. MAKE ANY NECESSARY REPAIRS OR CLEANUP TO MAINTAIN THE EFFECTIVENESS OF THE EROSION CONTROL DEVICES IMMEDIATELY.

ES-10: THE CONTRACTOR SHALL HAVE A RESPONSIBLE LAND DISTURBER ON-SITE AS REQUIRED.

EROSION & SEDIMENT CONTROL LEGEND

SYMBOL	VA. E&S HANDBOOK STANDARD
CE	STONE CONSTRUCTION ENTRANCE – 3.02
SF	SILT FENCE – 3.05
IP	INLET PROTECTION – 3.07
CIP	CULVERT INLET PROTECTION – 3.08
TO	TOPSOILING – 3.30
TS	TEMPORARY SEEDING – 3.31
PS	PERMANENT SEEDING –3.32
MU	MULCHING – 3.35

ALL DISTURBED GRASSED AREAS

CONSTRUCTION SEQUENCING

1. INSTALL PERIMETER EROSION AND SEDIMENT CONTROL MEASURES.
2. DEMOLISH EXISTING PAVEMENT, CURB, ETC. FOR INSTALLATION OF NEW SIDEWALK.
3. CONSTRUCT SIDEWALK.
4. STABALIZE ALL AFFECTED AREAS.
5. REMOVE TEMOPORARY EROSION SEDIMENT CONTROL MEASURES

(TS) TEMPORARY SEEDING SCHEDULE

ACCEPTABLE TEMPORARY SEEDING PLANT MATERIALS

PLANTING DATES	SPECIES	RATE (LBS/ACRE)
SEPT 1–FEB 15	50/50 MIX OF ANNUAL RYEGRASS (LOLIUM MULTI–FLORUM) & CEREAL (WINTER) RYE (SECALE CEREALE)	50–100
FEB 16–APR 20	ANNUAL RYEGRASS (LOLIUM MULTI–FLORUM)	60–100
MAY 1–AUG 31	GERMAN MILLET (SETARIA ITALICA)	50

SEEDINGS MADE IN FALL FOR WINTER COVER AND DURING HOT AND DRY SUMMER MONTHS SHALL BE MULCHED IMMEDIATELY UPON COMPLETION OF SEED APPLICATION WITH TACKIFIED STRAW, IN ACCORDANCE WITH VA E&S STD 3.35.

(PS) PERMANENT SEEDING SCHEDULE

GENERAL SLOPE (3:1 OR LESS)	TOTAL LBS PER ACRE
KENTUCKY 31 FESCUE	200 LBS.
KENTUCKY BLUEGRASS	10 LBS.
RED TOP GRASS	10 LBS.
SEASONAL NURSE CROP	30 LBS.
WHITE CLOVER	2 LBS.
	252 LBS.

SEASONAL NURSE CROP

MARCH, APRIL THROUGH MAY 15	ANNUAL RYE
MAY 16 THROUGH AUGUST 15	FOXTAIL MILLET
AUGUST 16 THROUGH SEPTEMBER,OCTOBER	ANNUAL RYE
NOVEMBER THROUGH FEBRUARY	WINTER RYE

LIME AND FERTILIZER NEEDS SHALL BE DETERMINED BY SOIL TESTS.

SEEDINGS TO BE MULCHED AT THE RATE OF 2 TONS PER ACRE WITH TACKIFIED STRAW, IMMEDIATELY UPON COMPLETION OF SEED APPLICATION, IN ACCORDANCE WITH VA E&S STD 3.35.

SEEDING SCHEDULES

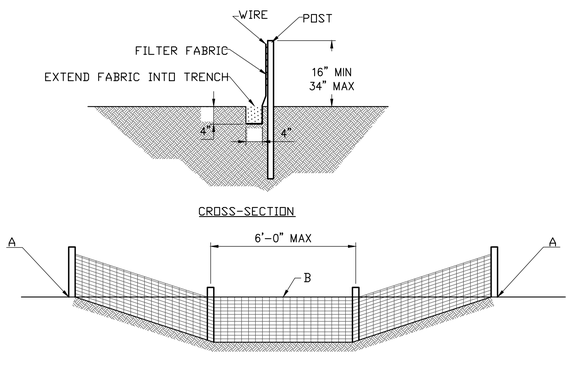

NOTES:

1. WHEN POINT B DROPS BELOW POINT A, USE EXTRA STRENGTH FILTER FABRIC WITH A MAXIMUM 3 FOOT SPACING OF POST.

(SF)

X SILT FENCE DETAIL
NOT TO SCALE

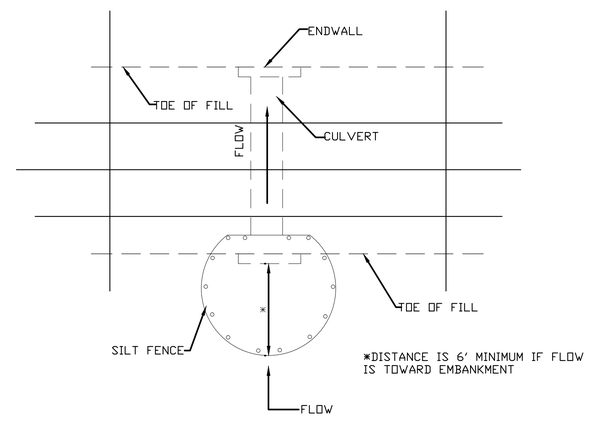

*OPTIONAL STONE COMBINATION

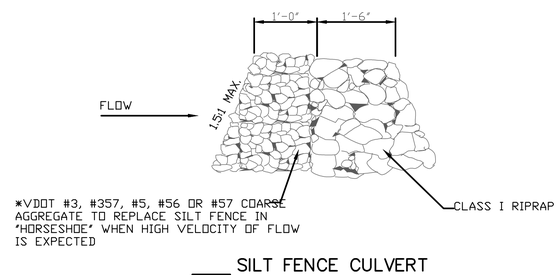

*VDOT #3, #357, #5, #56 OR #57 COARSE AGGREGATE TO REPLACE SILT FENCE IN 'HORSESHOE' WHEN HIGH VELOCITY OF FLOW IS EXPECTED

X SILT FENCE CULVERT INLET PROTECTION DETAIL
NOT TO SCALE

Drawing Copyright © 2015

CHA
1901 Innovation Drive, Suite 2100
Blacksburg, VA 24060
540.552.5548 • www.chacompanies.com

BLAND COUNTY BOARD OF SUPERVISORS
BLAND COUNTY, VIRGINIA

COMMUNITY OF ROCKY GAP
SAFE ROUTES TO SCHOOL
SIDEWALK PROJECT

IT IS A VIOLATION OF LAW FOR ANY PERSON, UNLESS THEY ARE ACTING UNDER THE DIRECTION OF A LICENSED PROFESSIONAL ENGINEER, ARCHITECT, LANDSCAPE ARCHITECT OR LAND SURVEYOR TO ALTER AN ITEM IN ANY WAY. IF AN ITEM BEARING THE STAMP OF A LICENSED PROFESSIONAL IS ALTERED, THE ALTERING ENGINEER, ARCHITECT, LANDSCAPE ARCHITECT OR LAND SURVEYOR SHALL STAMP THE DOCUMENT AND INCLUDE THE NOTATION "ALTERED BY" FOLLOWED BY THEIR SIGNATURE, THE DATE OF SUCH ALTERATION, AND A SPECIFIC DESCRIPTION OF THE ALTERATION.

No.	Submittal / Revision	App'd.	By	Date
5	ISSUED FOR BIDS	SMS	BSR	07/26/16
4	VDOT RESUBMITTAL	SMS	BSR	07/14/16
3	VDOT 90% SUBMITTAL	SMS	BSR	03/04/16
2	ISSUED FOR PERMITS	SMS	BSR	01/31/16
1	60% DESIGN REVIEW	SMS	BSR	11/30/15

EROSION & SEDIMENT CONTROL NARRATIVE, NOTES & DETAILS

Designed By:	Drawn By:	Checked By:
XXX	XXX	XXX
Issue Date: 07/2016	Project No: 30270	Scale: AS SHOWN

Drawing No.:
C-002

File: V:\PROJECTS\BVA\30270\CADD_ACAD\C-002_30270.DWG
Saved: 7/14/2016 2:14:47 PM Plotted: 8/3/2016 10:07:55 AM Current User: Rowe, Brad LastSavedBy: 4148

GENERAL NOTES

1. BASE INFORMATION PROVIDED BY SURVEY DATA PROVIDED BY NRV LAND SURVEYORS, DUBLIN, VA 24084, (540) 674-4275 AS WELL AS GIS DATA PROVIDED BY THE COUNTY.
2. THE ENGINEER SHALL BE NOTIFIED IN WRITING OF ANY CONDITIONS THAT VARY FROM THOSE SHOWN ON THE PLANS. THE CONTRACTOR'S WORK SHALL NOT VARY FROM THE PLANS WITHOUT THE EXPRESSED APPROVAL OF THE ENGINEER.
3. THE CONTRACTOR SHALL MAINTAIN ACCESS TO ALL COMMERCIAL, RESIDENTIAL, AND PUBLIC PROPERTIES WHENEVER POSSIBLE OR AS DIRECTED BY THE ENGINEER.
4. THE CONTRACTOR SHALL TAKE CARE TO PREVENT DAMAGE TO EXISTING UTILITIES. DAMAGED UTILITIES SHALL BE IMMEDIATELY REPAIRED BY THE CONTRACTOR AT THE CONTRACTOR'S EXPENSE.
5. A PRE-CONSTRUCTION MEETING IS REQUIRED. CONTRACTOR TO CONTACT THE OWNER TO INSPECT THE SITE BEFORE ANY DEMOLITION OR EXCAVATION BEGINS.
6. FOR THE PURPOSE OF PLAN APPROVAL, _____, SHALL BE THE RESPONSIBLE LAND DISTURBER UNTIL THE CONTRACT IS AWARDED. THE CONTRACTOR SHALL NAME A PERSON WHO IS CERTIFIED AS A RESPONSIBLE LAND DISTURBER. THE RESPONSIBLE LAND DISTURBER SHALL BE TRANSFERRED FROM _____TO THE CERTIFIED PERSON NAMED BY THE CONTRACTOR PRIOR TO THE INITIATION OF LAND-DISTURBING ACTIVITY. THE CONTRACTOR MUST PREPARE & SUBMIT THE SIGNED APPLICATION FOR THE VSMP PERMIT TO DCR ONE WEEK PRIOR TO LAND DISTURBANCE. THE CONTRACTOR IS ALSO RESPONSIBLE FOR PREPARING ALL REQUIRED ATTACHMENTS AND SUPPORTING INFORMATION.
7. ALL STANDARDS REFER TO THOSE OF THE VIRGINIA DEPARTMENT OF TRANSPORTATION (VDOT) AND/OR THE COUNTY OF BLAND.
8. THE COUNTY DEPARTMENT OF PUBLIC WORKS MUST BE NOTIFIED:
   48 HOURS PRIOR TO THE PRE-CONSTRUCTION CONFERENCE
   24 HOURS PRIOR TO THE COMMENCEMENT OF LAND DISTURBING ACTIVITY
   48 HOURS PRIOR TO THE FINAL INSPECTION
9. IF THERE ARE ANY SIGNS WITHIN THE CONSTRUCTION LIMITS THAT THE CONTRACTOR FEELS ARE IN THE WAY, PLEASE CONTACT THE DEPARTMENT OF PUBLIC WORKS FOR REMOVAL AND RE-INSTALLATION.
10. THE CONTRACTOR IS RESPONSIBLE FOR INSTALLING ALL STOP SIGNS, DIRECTIONAL SIGNS AND STRIPING SHOWN ON THE PLANS.

GENERAL SITE REMOVAL NOTES

1. ALL EXCESS MATERIAL SHALL BE DISPOSED OF OFF-SITE IN A LEGAL MANNER, AT THE CONTRACTOR'S EXPENSE.
2. THE CONTRACTOR SHALL EXERCISE CARE DURING REMOVAL OPERATIONS. ANY ITEMS INDICATED TO REMAIN THAT ARE DAMAGED DURING REMOVAL OPERATIONS SHALL BE REPAIRED OR REPLACED IN KIND, BY THE CONTRACTOR, AT NO COST TO THE OWNER.
3. THE PLANS SHOW SUBSURFACE STRUCTURES, ABOVE-GROUND STRUCTURES AND/OR UTILITIES FROM FIELD LOCATION AND RECORD MAPPING, EXACT LOCATION OF WHICH MAY VARY FROM THE LOCATIONS INDICATED. IN PARTICULAR, THE CONTRACTOR IS WARNED THAT THE EXACT OR EVEN APPROXIMATE LOCATION OF SUCH PIPELINES, SUBSURFACE STRUCTURES AND/OR UTILITIES IN THE AREA MAY BE DIFFERENT FROM THAT SHOWN OR MAY NOT BE SHOWN, AND IT SHALL BE HIS RESPONSIBILITY TO PROCEED WITH GREAT CARE IN EXECUTING ANY WORK. 72 HOURS BEFORE YOU DIG OR DRILL, CALL VIRGINIA 811.

GENERAL SITE LAYOUT NOTES

1. THE CONTRACTOR SHALL BE RESPONSIBLE FOR PROVIDING ALL FIELD LAYOUT. THE CONTRACTOR SHALL MAKE TIES TO ALL UTILITY CONNECTIONS AND PROVIDE AS-BUILT PLANS FOR ALL UTILITIES SHOWING TIES TO CONNECTIONS, BENDS, VALVES, LENGTHS OF LINES, AND INVERTS. AS-BUILT PLANS SHOWING ALL UNDERGROUND UTILITIES INSTALLED OR ENCOUNTERED SHALL BE REVIEWED BY THE ENGINEER. THE CONTRACTOR SHALL PROVIDE ANY CORRECTIONS OR ADDITIONS TO THE SATISFACTION OF THE OWNER AND HIS REPRESENTATIVES BEFORE UTILITIES WILL BE ACCEPTED.
2. THE CONTRACTOR SHALL PROVIDE SMOOTH TRANSITIONS BETWEEN NEW WORK AND EXISTING CONDITIONS.
3. ALL ANGLES ARE 90°, UNLESS OTHERWISE INDICATED.

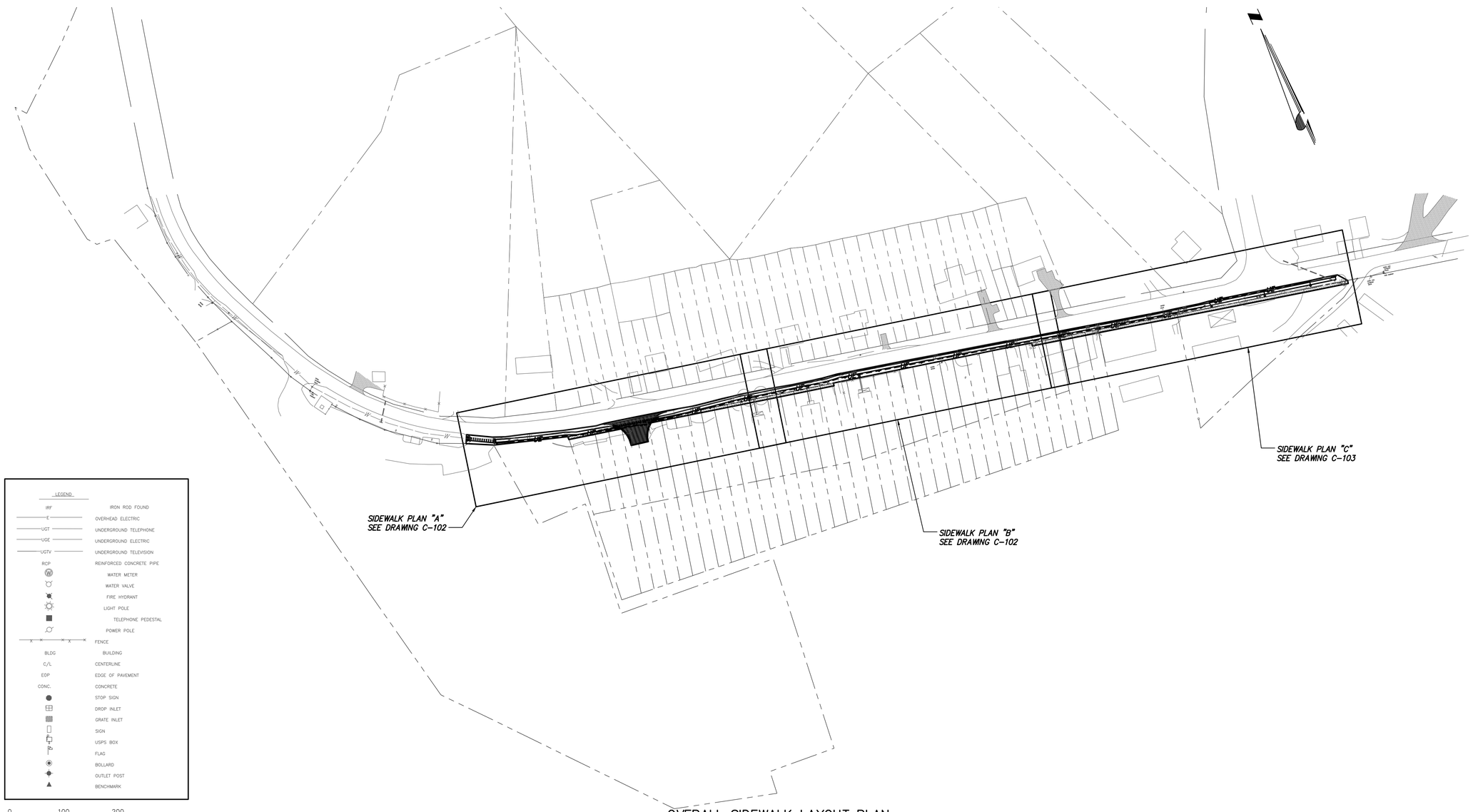

LEGEND

IRF	IRON ROD FOUND
E	OVERHEAD ELECTRIC
UGT	UNDERGROUND TELEPHONE
UGE	UNDERGROUND ELECTRIC
UGTV	UNDERGROUND TELEVISION
RCP	REINFORCED CONCRETE PIPE
W	WATER METER
	WATER VALVE
	FIRE HYDRANT
	LIGHT POLE
	TELEPHONE PEDESTAL
	POWER POLE
X X X X	FENCE
BLDG	BUILDING
C/L	CENTERLINE
EOP	EDGE OF PAVEMENT
CONC.	CONCRETE
	STOP SIGN
	DROP INLET
	GRATE INLET
	SIGN
	USPS BOX
	FLAG
	BOLLARD
	OUTLET POST
	BENCHMARK

0 100 200
Scale in feet

OVERALL SIDEWALK LAYOUT PLAN

SCALE: 1"=100'

File: V:\PROJECTS\BVA\30270\CADD_ACAD\C-101_30270.DWG
Saved: 7/14/2016 2:13:16 PM Plotted: 8/3/2016 10:08:53 AM Current User: Rowe, Brad LastSavedBy: 4148

Drawing Copyright © 2015

CHA
1901 Innovation Drive, Suite 2100
Blacksburg, VA 24060
540.552.5548 • www.chacompanies.com

BLAND COUNTY BOARD OF SUPERVISORS
BLAND COUNTY, VIRGINIA

COMMONWEALTH OF VIRGINIA
STEPHEN M. STEELE
Lic. No. 41449
07/26/16
PROFESSIONAL ENGINEER

IT IS A VIOLATION OF LAW FOR ANY PERSON, UNLESS THEY ARE ACTING UNDER THE DIRECTION OF A LICENSED PROFESSIONAL ENGINEER, ARCHITECT, LANDSCAPE ARCHITECT OR LAND SURVEYOR TO ALTER AN ITEM IN ANY WAY. IF AN ITEM BEARING THE STAMP OF A LICENSED PROFESSIONAL IS ALTERED, THE ALTERING ENGINEER, ARCHITECT, LANDSCAPE ARCHITECT OR LAND SURVEYOR SHALL STAMP THE DOCUMENT AND INCLUDE THE NOTATION "ALTERED BY" FOLLOWED BY THEIR SIGNATURE, THE DATE OF SUCH ALTERATION, AND A SPECIFIC DESCRIPTION OF THE ALTERATION.

COMMUNITY OF ROCKY GAP
SAFE ROUTES TO SCHOOL
SIDEWALK PROJECT

No.	Submittal / Revision	App'd.	By	Date
1	ISSUED FOR BIDS	SMS	BSR	07/26/16
2	VDOT RESUBMITTAL	SMS	BSR	07/14/16
3	VDOT 90% SUBMITTAL	SMS	BSR	03/04/16
4	ISSUED FOR PERMITS	SMS	BSR	01/31/16
5	60% DESIGN REVIEW	SMS	BSR	11/30/15

OVERALL LAYOUT SHEET

Designed By:	Drawn By:	Checked By:
BSR	CTB	SMS
Issue Date: 07/2016	Project No: 30270	Scale: AS SHOWN

Drawing No.:
C-101

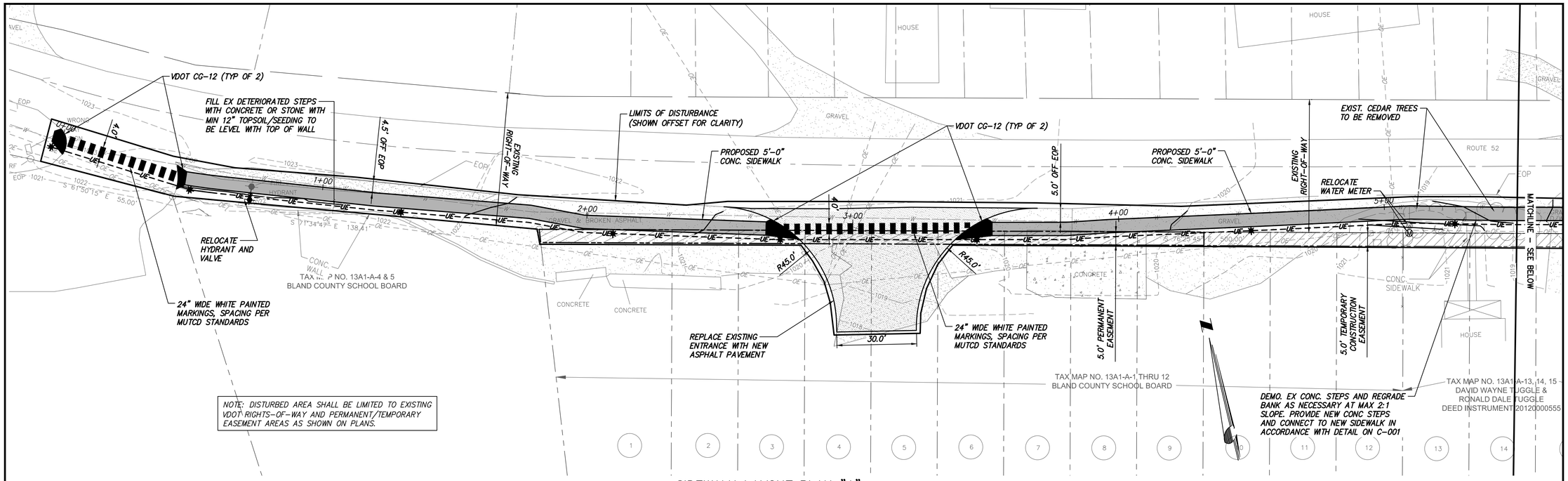

NOTE: DISTURBED AREA SHALL BE LIMITED TO EXISTING VDOT RIGHTS-OF-WAY AND PERMANENT/TEMPORARY EASEMENT AREAS AS SHOWN ON PLANS.

SIDEWALK LAYOUT PLAN "A"

SCALE: 1"=20'

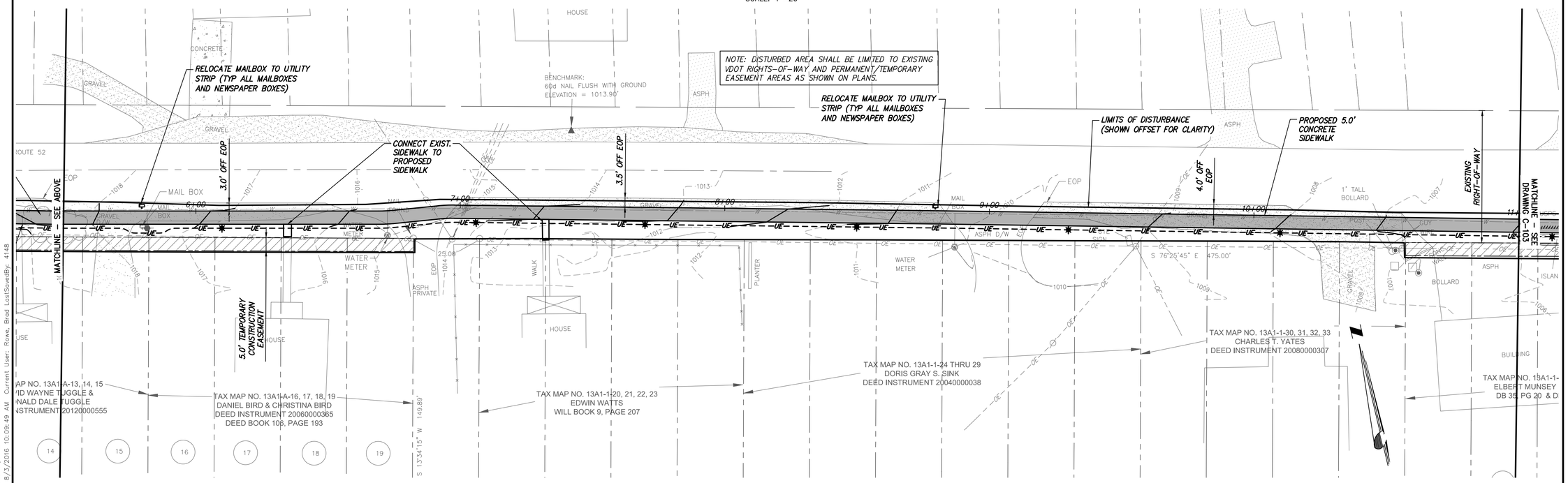

NOTE: DISTURBED AREA SHALL BE LIMITED TO EXISTING VDOT RIGHTS-OF-WAY AND PERMANENT/TEMPORARY EASEMENT AREAS AS SHOWN ON PLANS.

SIDEWALK LAYOUT PLAN "B"

SCALE: 1"=20'

0 20 40
Scale in feet

File: V:\PROJECTS\BVA\30270\CADD_ACAD\C-102_30270.DWG Current User: Rowe, Brad LastSavedBy: 4148
Saved: 7/14/2016 2:10:29 PM Plotted: 8/3/2016 10:09:49 AM

Drawing Copyright © 2015

CHA
1901 Innovation Drive, Suite 2100
Blacksburg, VA 24060
540.552.5548 • www.chacompanies.com

BLAND COUNTY BOARD OF SUPERVISORS
BLAND COUNTY, VIRGINIA

COMMONWEALTH OF VIRGINIA
STEPHEN M. STEELE
Lic. No. 41449
07/26/16
PROFESSIONAL ENGINEER

IT IS A VIOLATION OF LAW FOR ANY PERSON, UNLESS THEY ARE ACTING UNDER THE DIRECTION OF A LICENSED PROFESSIONAL ENGINEER, ARCHITECT, LANDSCAPE ARCHITECT OR LAND SURVEYOR TO ALTER AN ITEM IN ANY WAY. IF AN ITEM BEARING THE STAMP OF A LICENSED PROFESSIONAL IS ALTERED, THE ALTERING ENGINEER, ARCHITECT, LANDSCAPE ARCHITECT OR LAND SURVEYOR SHALL STAMP THE DOCUMENT AND INCLUDE THE NOTATION "ALTERED BY" FOLLOWED BY THEIR SIGNATURE, THE DATE OF SUCH ALTERATION, AND A SPECIFIC DESCRIPTION OF THE ALTERATION.

COMMUNITY OF ROCKY GAP
SAFE ROUTES TO SCHOOL
SIDEWALK PROJECT

No.	Submittal / Revision	App'd.	By	Date
1	ISSUED FOR BIDS	SMS	BSR	07/26/16
0	VDOT RESUBMITTAL	SMS	BSR	07/14/16
0	VDOT 90% SUBMITTAL	SMS	BSR	03/04/16
0	ISSUED FOR PERMITS	SMS	BSR	01/31/16
0	60% DESIGN REVIEW	SMS	BSR	11/30/15

LAYOUT PLANS A & B

Designed By:	Drawn By:	Checked By:
BSR	CTB	SMS
Issue Date: 07/2016	Project No: 30270	Scale: AS SHOWN

Drawing No.:
C-102

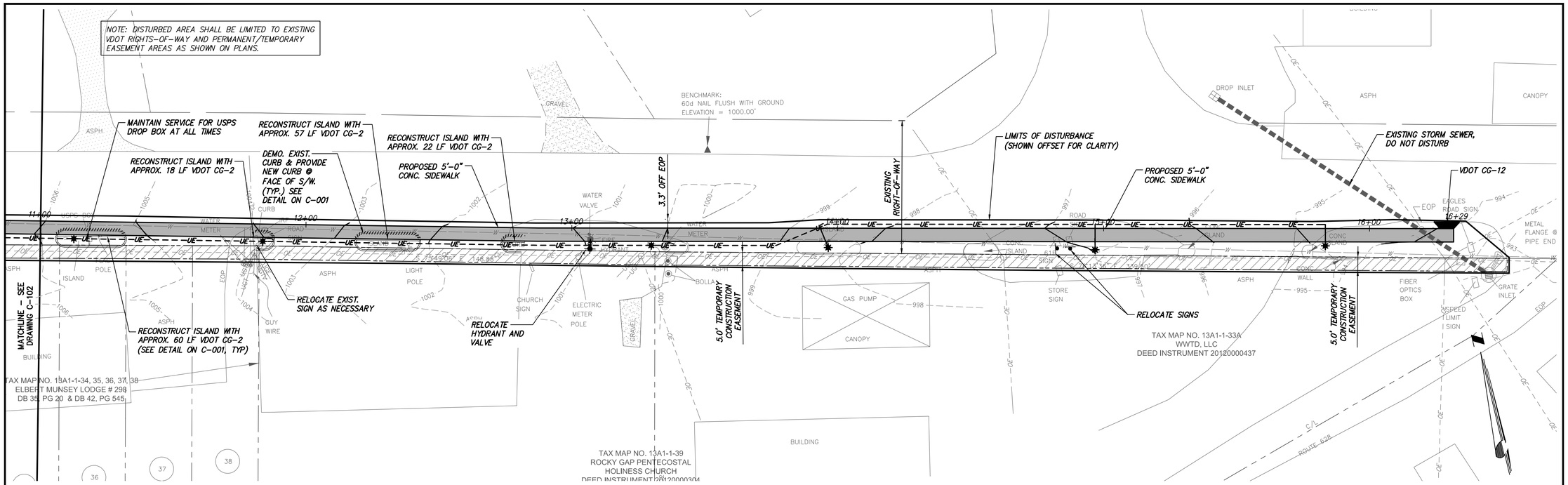

SIDEWALK LAYOUT PLAN "C"

SCALE: 1"=20'

0 20 40
Scale in feet

File: V:\PROJECTS\BVA\30270\CADD_ACAD\C-103_30270.DWG
Saved: 7/14/2016 2:10:36 PM Plotted: 8/3/2016 10:10:43 AM Current User: Rowe, Brad LastSavedBy: 4148

Drawing Copyright © 2015

CHA
1901 Innovation Drive, Suite 2100
Blacksburg, VA 24060
540.552.5548 • www.chacompanies.com

BLAND COUNTY BOARD OF SUPERVISORS
BLAND COUNTY, VIRGINIA

COMMONWEALTH OF VIRGINIA
STEPHEN M. STEELE
Lic. No. 41449
07/14/16
PROFESSIONAL ENGINEER

IT IS A VIOLATION OF LAW FOR ANY PERSON, UNLESS THEY ARE ACTING UNDER THE DIRECTION OF A LICENSED PROFESSIONAL ENGINEER, ARCHITECT, LANDSCAPE ARCHITECT OR LAND SURVEYOR TO ALTER AN ITEM IN ANY WAY. IF AN ITEM BEARING THE STAMP OF A LICENSED PROFESSIONAL IS ALTERED, THE ALTERING ENGINEER, ARCHITECT, LANDSCAPE ARCHITECT OR LAND SURVEYOR SHALL STAMP THE DOCUMENT AND INCLUDE THE NOTATION "ALTERED BY" FOLLOWED BY THEIR SIGNATURE, THE DATE OF SUCH ALTERATION, AND A SPECIFIC DESCRIPTION OF THE ALTERATION.

COMMUNITY OF ROCKY GAP
SAFE ROUTES TO SCHOOL
SIDEWALK PROJECT

No.	Submittal / Revision	App'd.	By	Date
E	ISSUED FOR BIDS	SMS	BSR	07/26/16
D	VDOT RESUBMITTAL	SMS	BSR	07/14/16
C	VDOT 90% SUBMITTAL	SMS	BSR	03/04/16
B	ISSUED FOR PERMITS	SMS	BSR	01/31/16
A	60% DESIGN REVIEW	SMS	BSR	11/30/15

LAYOUT PLAN C

Designed By:	Drawn By:	Checked By:
BSR	CTB	SMS
Issue Date: 07/2016	Project No: 30270	Scale: AS SHOWN

Drawing No.:
C-103

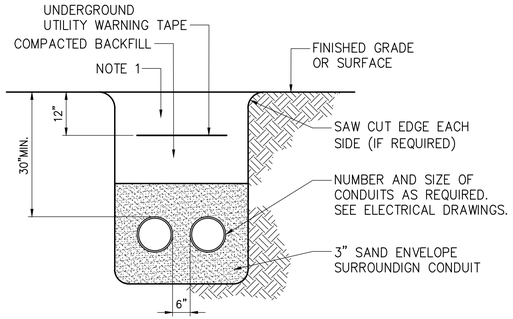

NOTE

1. REPLACE EXISTING SURFACE CONDITIONS IN KIND TO INCLUDE, BUT NOT LIMITED TO: CONCRETE, CRUSHED STONE, SELECT GRAVEL, ASPHALT, TOPSOIL AND GRASS.

1 TYPICAL DIRECT BURIED CONDUIT(S) DETAIL

– NOT TO SCALE

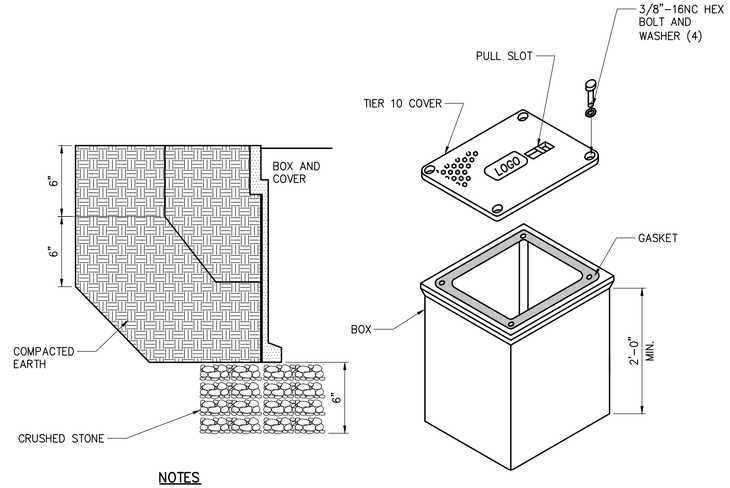

NOTES

1. SIZE HANDHOLE AT EACH LOCATION PER NEC. MINIMUM SIZE SHALL BE 18" X 18" X 24".
2. PROVIDE ALL CONDUITS WITH A PULL ROPE.
3. REPLACE EXISTING SURFACE CONDITIONS IN KIND TO INCLUDE, BUT NOT LIMITED TO: CONCRETE, CRUSHED STONE, SELECT GRAVEL, ASPHALT CONCRETE, TOPSOIL AND GRASS.

2 HANDHOLE – DETAIL

– NOT TO SCALE

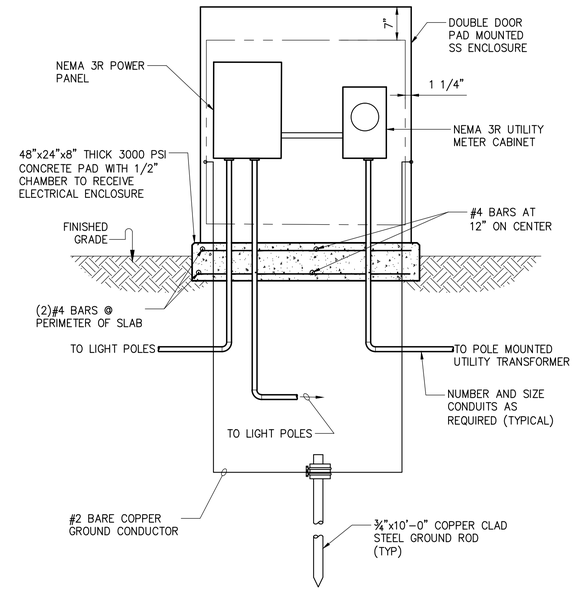

NOTES

1. NEMA 3R, DOUBLE DOOR, LOCKING ENCLOSURE, 48" HIGH, 36" WIDE AND 15" DEEP. APX. ENCLOSURES INC CATALOG NUMBER TCDD483615 OR APPROVED EQUAL.
2. ALL EXPOSED EQUIPMENT SHALL BE GROUNDED
3. SEE SITE PLAN FOR CONDUIT ROUTING.

3 ELECTRICAL ENCLOSURE DETAIL

– NOT TO SCALE

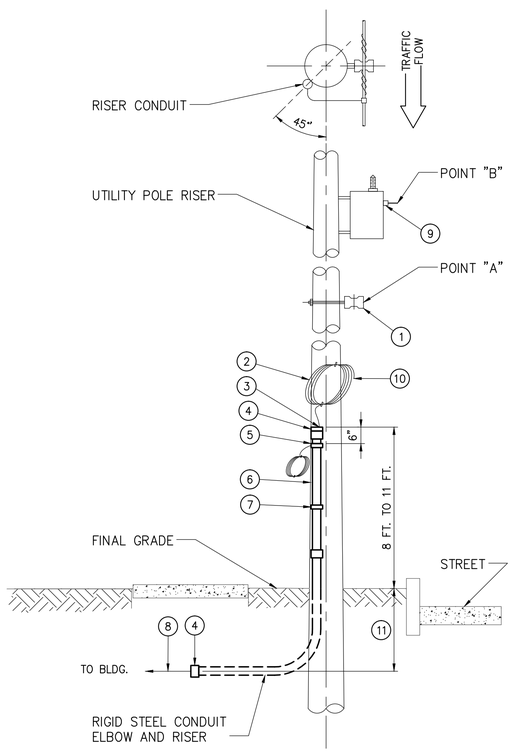

CODED NOTES

1. UTILITY COMPANY'S SECONDARY RACK–POINT "A".
2. SERVICE LATERAL CABLE TO BE FURNISHED AND INSTALLED BY CUSTOMER. IT MUST BE LONG ENOUGH TO EXTEND 3 FT. (900 MM) ABOVE POINT "A" OR "B" WITHOUT A SPLICE. IF SECONDARY RACK IS NOT ON POLE, ASK UTILITY COMPANY FOR ITS LOCATION. PENDING CONNECTION BY UTILITY COMPANY, TEMPORARILY SECURE CABLE TO POLE TO PREVENT DAMAGE.
3. PROVIDE DUCT SEAL.
4. INSULATING BUSHING.
5. FOR GALVANIZED STEEL CONDUIT ELBOWS, THEY SHALL BE GROUNDED BY BONDING TO AN APPROVED V–BOLT TYPE GROUND CLAMP 6" (150 MM) FROM TOP OF THE CONDUIT. A CONDUCTOR OF SUFFICIENT LENGTH SHALL BE PROVIDED TO EXTEND 24" (600 MM) BEYOND THE UTILITY COMPANY'S SECONDARY NEUTRAL. THE CONDUCTOR SHALL BE SIZED AS REQUIRED BY THE NATIONAL ELECTRICAL CODE, ARTICLE 250, BUT IN NO CASE SHALL IT BE SMALLER THAN #4 AWG COPPER. RECOMMEND USE OF CORROSION RESISTANT BEND IN LOCATIONS SUBJECT TO HIGHWAY SALTING.
6. PROVIDE RIGID GALVANIZED STEEL RISER CONDUIT. THE CONDUIT SHALL RISE ON THE SIDE OF THE POLE AWAY FROM TRAFFIC. CONSULT UTILITY COMPANY FOR PROPER LOCATION ON POLE.
7. PIPE STRAPS, INSTALL AT NOT MORE THAN 30" (750 MM) INTERVALS.
8. SERVICE LATERAL TO BUILDING.
9. UTILITY COMPANY'S TRANSFORMER SECONDARY TERMINALS –– POINT "B".
10. SEAL CABLE ENDS TO PREVENT ENTRANCE OF MOISTURE DURING CONSTRUCTION.
11. THE BURIAL DEPTH SHALL BE 30" MINIMUM.
12. ROUTE SPARE CONDUIT 12" ABOVE FINISHED GRADE. CAP AND SEAL WATERTHIGHT.

4 RISER POLE DETAIL – SECONDARY SERVICE

– NOT TO SCALE

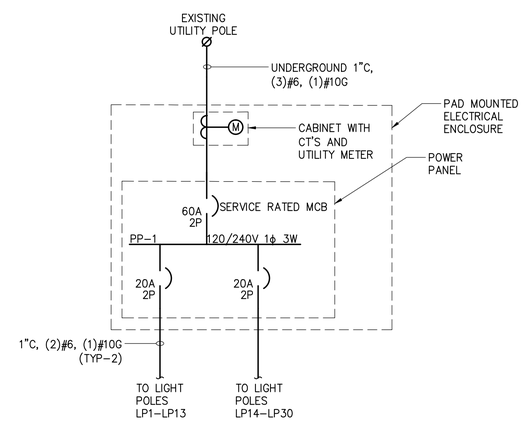

ONE–LINE DIAGRAM

NOT TO SCALE

Drawing Copyright © 2015

CHA
1901 Innovation Drive, Suite 2100
Blacksburg, VA 24060
540.552.5548 • www.chacompanies.com

BLAND COUNTY BOARD OF SUPERVISORS
BLAND COUNTY, VIRGINIA

COMMUNITY OF ROCKY GAP
SAFE ROUTES TO SCHOOL
SIDEWALK PROJECT

COMMONWEALTH OF VIRGINIA
STEPHEN M. STEELE
Lic. No. 41449
07/26/16
PROFESSIONAL ENGINEER

IT IS A VIOLATION OF LAW FOR ANY PERSON, UNLESS THEY ARE ACTING UNDER THE DIRECTION OF A LICENSED PROFESSIONAL ENGINEER, ARCHITECT, LANDSCAPE ARCHITECT OR LAND SURVEYOR TO ALTER AN ITEM IN ANY WAY. IF AN ITEM BEARING THE STAMP OF A LICENSED PROFESSIONAL IS ALTERED, THE ALTERING ENGINEER, ARCHITECT, LANDSCAPE ARCHITECT OR LAND SURVEYOR SHALL STAMP THE DOCUMENT AND INCLUDE THE NOTATION "ALTERED BY" FOLLOWED BY THEIR SIGNATURE, THE DATE OF SUCH ALTERATION, AND A SPECIFIC DESCRIPTION OF THE ALTERATION.

No.	Submittal / Revision	App'd.	By	Date
5	ISSUED FOR BIDS	SMS	BSR	07/26/16
4	VDOT RESUBMITTAL	SMS	BSR	07/14/16
3	VDOT 90% SUBMITTAL	SMS	BSR	03/04/16
2	ISSUED FOR PERMITS	SMS	BSR	01/31/16
1	60% DESIGN REVIEW	SMS	BSR	11/30/15

ELECTRICAL DETAILS

Designed By:	Drawn By:	Checked By:
SR	LH	JD
Issue Date: 07/2016	Project No: 30270	Scale: AS SHOWN

Drawing No.:
E-600

File: V:\PROJECTS\BVA\30270\CADD_ACAD\E-600-30270.DWG
Saved: 7/14/2016 2:21:46 PM Plotted: 8/3/2016 10:11:39 AM Current User: Rowe, Brad LastSavedBy: 4148